MODEL 6600

Downflow Brining

Service Manual

IMPORTANT: Fill in pertinent information on page 2 for future reference.

MODEL 6600 Downflow

Job Specification Sheet

Job No. _____

Model No. _____

Water Test_____

Capacity Per Unit _____ Max. _____ Per Regeneration

Mineral Tank Size: Dia._____ Height_____

Under Bedding _____ Amount_____

Type of Media _____ Cubic Feet_____

Brine Tank Size & Salt Setting Per Regeneration:

_____

Valve Programming

Water Hardness _____

System Capacity_____

Regeneration Time_____

Regeneration Cycle Step #1_____

Regeneration Cycle Step #2_____

Regeneration Cycle Step #3_____

Regeneration Cycle Step #4_____

Regeneration Cycle Step #5_____

Notes:

_____

_____

_____

_____

Printed in U.S.A.

MODEL 6600 Downflow

General Residential Installation Check List

WATER PRESSURE: A minimum of 25 pounds of water pressure is required for regeneration valve to operate effectively.

ELECTRICAL FACILITIES: An uninterrupted alternating current (A/C) supply is required. Please make sure your voltage supply is compatible with your unit before installation.

EXISTING PLUMBING: Condition of existing plumbing should be free from lime and iron buildup. Piping that is built up heavily with lime and/or iron should be replaced. If piping is clogged with iron, a separate iron filter unit should be installed ahead of the water softener.

LOCATION OF SOFTENER AND DRAIN: The softener should be located close to a clean working drain and connected according to local plumbing codes.

BY-PASS VALVES: Always provide for the installation of a by-pass valve if unit is not equipped with one.

CAUTION: Water pressure is not to exceed 120 p.s.i., water temperature is not to exceed 110°F, and the unit cannot be subjected to freezing conditions.

Installation and Start-up Procedures

1. Place the softener tank where you want to install the unit, making sure the tank is level and on a firm base.

2. During cold weather it is recommended that the installer warm the valve up to room temperature before operating.

3. All plumbing should be done in accordance with local plumbing codes. The pipe size for the drain should be a minimum of 1/2″. Backwash flow rates in excess of 7 gpm or length in excess of 20′ require 3/4″ drain line.

4. The 1″ distributor tube (1.050 O.D.) should be cut flush with top of each tank. Note: Only use silicone lubricant.

5. Lubricate the distributor O-ring seal and tank O-ring seal. Place the main control valve on tank.

6. Solder joints near the drain must be done prior to connecting the Drain Line Flow Control fitting (DLFC). Leave at least 6″ between the DLFC and solder joints when soldering pipes that are connected on the DLFC. Failure to do this could cause interior damage to DLFC.

7. Teflon tape is the only sealant to be used on the drain fitting.

8. Make sure that the floor is clean beneath the salt storage tank and that it is level.

9. Place approximately 1″ of water above the grid plate. If a grid is not utilized, fill to the top of the air check in the salt tank. Do not add salt to the brine tank at this time.

10. On units with a by-pass, place in by-pass position. Turn on the main water supply. Open a cold soft water tap nearby and let run a few minutes or until the system is free from foreign material (usually solder) that may have resulted from the installation. Once clean, close the water tap.

11. Place the by-pass in service position and let water flow into the mineral tank. When water flow stops, slowly open a cold water tap nearby and let run until the air is purged from the unit. Then close tap.

12. Plug the valve into an approved power source. Once the valve is powered it will drive to the Service Position.

Printed in U.S.A.

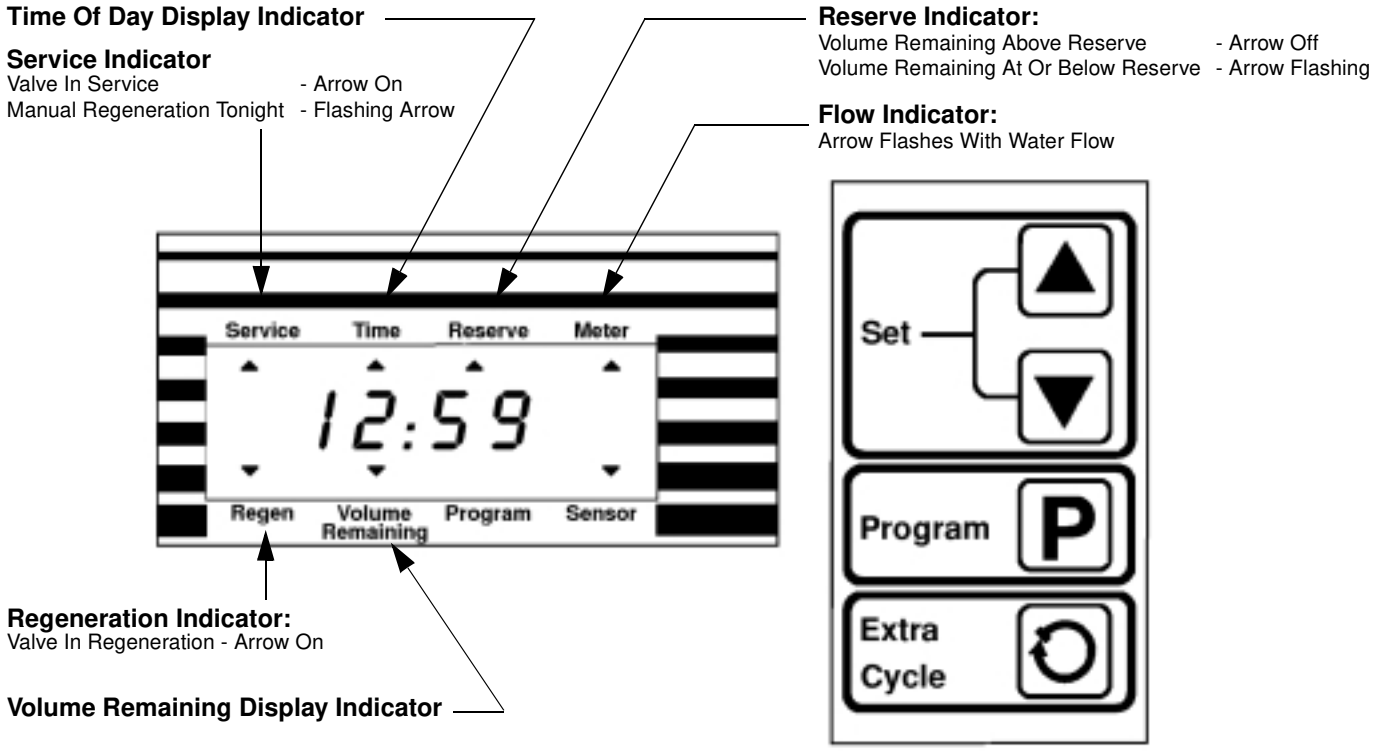

13. Whenever the valve returns to the Service Position normal operation is resumed. In normal operation the Time Of Day, and if flow meter equipped, Volume Remaining Displays alternate being viewed. Set the Time Of Day Display by depressing the Up or Down Set Button, to the correct time. (See Fig. 1) Note: Time Of Day must be set correctly to either A.M. or P.M.

For Example:
12:59 A.M.
(Valve In Service)

14. **Flow Meter Equipped Valves Only:** The Volume Remaining Display is the volume of water (in gallons) remaining prior to regeneration, including any reserve capacity. Without any water usage the Meter Arrow should be either off or on but not changing. Open a soft water tap. The Meter Arrow should begin flashing at a rate that varies with flow rate. Close the tap after 3 - 5 gallons of water flow.

For Example:
833 Gallons Of Water Remaining
(Valve In Service)
(No Water Flow)

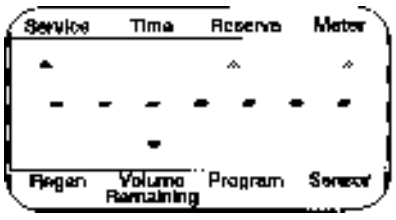

For Example:
0 Gallons Of Water Remaining
(Valve In Service)
(Water Flowing, Meter Arrow Flashing)
(Volume is below reserve capacity)
(Reserve Arrow Flashing)

Printed in U.S.A.

Installation and Start-up Procedures (Cont'd.)

15. Manually initiate a regeneration cycle and allow water to run to drain for 3 to 4 minutes. Next, manually step the valve through a regeneration cycle checking valve operation in each step.
    A. Initiating Regeneration (Depending on the timer regeneration type you have one or two (2) Options):
        1. **Press and Release the Extra Cycle Button.** With Immediate Regeneration Timers the control will go into regeneration immediately. With Delayed Regeneration Timers the Service Arrow will begin to flash immediately and a regeneration will occur at the preset regeneration time (i.e. 2:00 A.M.)
        2. **Press and Hold for 5 seconds the Extra Cycle Button.** The control will go into regeneration immediately.
    B. Control During Regeneration:
        1. During regeneration the control will display the regeneration step number the valve is advancing to, or has reached, and the time remaining in that step.

For Example:
(Valve is advancing to Regeneration Step #1)
(#1 Flashing)
(Regeneration Arrow On)

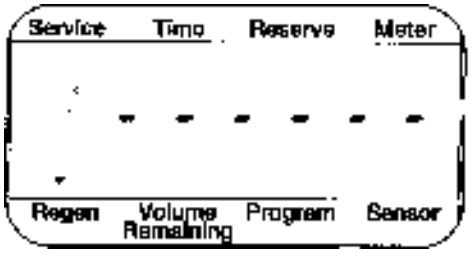

        2. When the first cycle step is reached, a #1 will turn on to indicate the current regeneration cycle step.

For Example:
(Regeneration Step #1 has been reached)
(10.0 minutes remain in Step #1)
(Regeneration Arrow On)

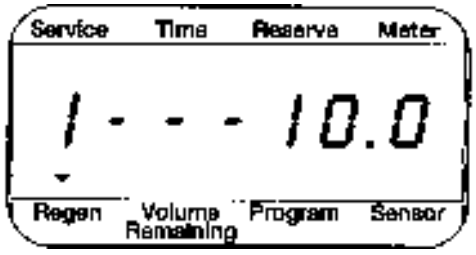

        3. Pushing the Extra Cycle Button during a regeneration step will immediately advance the valve to the next regeneration step position.
        4. Pushing the Up or Down Set Button during a regeneration step will adjust the time remaining in that current regeneration step. Programmed Regeneration Steps will not be changed.
        5. Once all regeneration cycle steps have been completed the valve will return to service and resume normal operation.
16. Add water to the brine tank to the top of the air check. Manually step the valve to the Brine Draw position (see Step #14) and allow the valve to draw water from the brine tank until it stops. Note: The air check will check at approximately the midpoint of the screened intake area.
17. Manually step the valve to the brine refill position and allow the valve to return to service automatically.
18. Make sure the brine refill time (salt dosage) is set as recommended by the manufacturer.
19. With the valve in service, check that there is about 1″ of water above the grid in the brine tank, if used.
20. Fill the brine tank with salt.
21. A **9V Alkaline Battery** is recommended to be installed at all times for proper valve operation.

Printed in U.S.A.

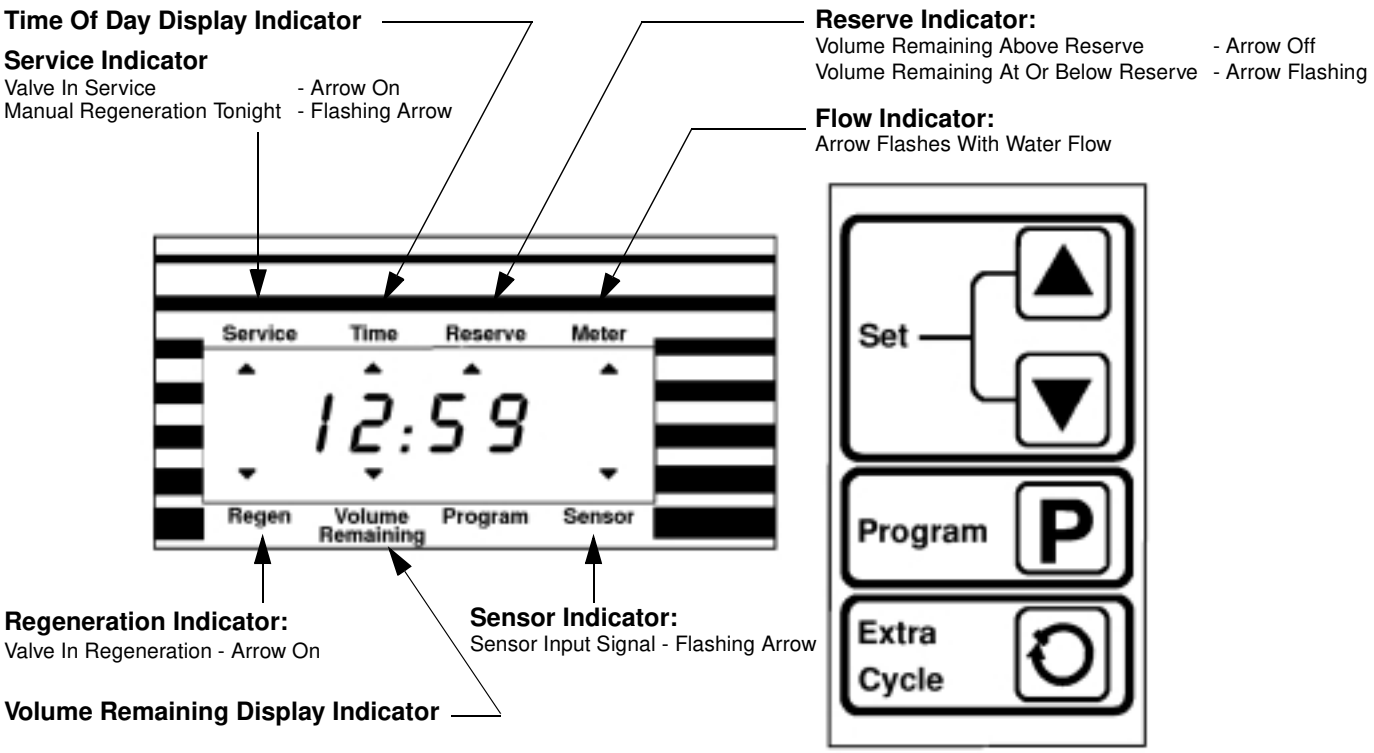

Normal Control Operation

Flow Meter Equipped Delayed Regeneration Valves

In Normal Operation the Time Of Day Display will alternate being viewed with the Volume Remaining Display. Water flow through the unit is indicated by the Meter Arrow that will flash in a direct relationship to flow rate. As treated water is used, the Volume Remaining Display will count down from a maximum value to the calculated reserve capacity. Once this occurs, the Reserve Arrow will begin to flash as a indication that reserve capacity is being used. At the preset Regeneration Time a regeneration cycle will then be initiated immediately.

For Example:
235 Gallons Of Water Remaining
(Valve In Service)
(No Water Flow)
(Volume is below reserve capacity)

For Example:
0 Gallons Of Water Remaining
(Valve In Service)
(Water Flowing, Meter Arrow Flashing)
(Volume is below reserve capacity)

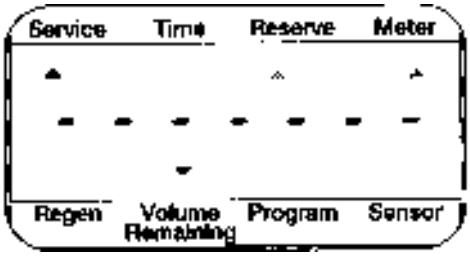

Printed in U.S.A.

Control Operation (Cont'd.)

Timeclock Regeneration Valves

In Normal Operation the Time Of Day Display will be viewed at all times. The control will operate normally until the days since the last regeneration reaches the preset number of days. Once this occurs, a regeneration cycle will then be initiated immediately at the preset Regeneration Time.

Flow Meter Equipped Immediate Regeneration Valves

In Normal Operation the Time Of Day Display will alternate being viewed with the Volume Remaining Display. Water flow through the unit is indicated by the Meter Arrow that will flash in a direct relationship to flow rate. As treated water is used, the Volume Remaining Display will count down from a maximum value to zero. Once this occurs a regeneration cycle will then be initiated immediately.

For Example:
525 Gallons Of Water Remaining
(Valve in Service)
(Water flowing, Meter Arrow Flashing)

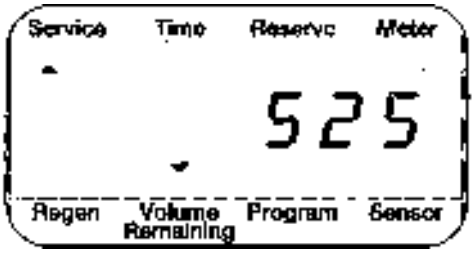

Sensor Immediate Regeneration Valves

In Normal Operation the Time Of Day Display will be viewed at all times. The control will operate normally until a valid sensor input signal is received. Once this occurs, a regeneration cycle will then be initiated immediately. The Sensor Input Arrow will flash until the signal is determined to be valid.

Sensor Delayed Regeneration Valves

In Normal Operation the Time Of Day Display will be viewed at all times. The control will operate normally until a valid sensor input signal is received. Once this occurs, a regeneration cycle will then be initiated immediately at the preset Regeneration Time. The Sensor Input Arrow will flash until the signal is determined to be valid. Then the Reserve Arrow will begin to flash as a indication that reserve capacity is being used.

For Example:
12:58 P.M. With Invalid Sensor Signal
(Valve in Service)
(Sensor Arrow Flashing)

For Example:
12:59 P.M. With Valid Sensor Signal
(Sensor Arrow On)
(Reserve Arrow Flashing) (Delayed Regen)

Immediate Regeneration Valves With Days Between Regeneration Override Set

When the valve reaches its set Days Since Regeneration Override value a regeneration cycle will be initiated immediately. This event occurs regardless of the Volume Remaining display having reached zero.

Printed in U.S.A.

Delayed Regeneration Valves With Days Between Regeneration Override Set

When the valve reaches its set Days Since Regeneration Override value a regeneration cycle will be initiated at the preset Regeneration Time. This event occurs regardless of the Volume Remaining display having reached the calculated reserve capacity.

Control Operation During A Power Failure

During a power failure all control displays will be turned off and regeneration cycles delayed. The control will otherwise continue to operate normally until line power is restored or battery backup power is lost.

1. If battery backup power is never lost during a power outage, the control will continue to operate normally, without the loss of data, until line power is restored.
2. If battery backup power is lost during a power outage, the control will store the current Time Of Day, Volume Remaining, Regeneration Cycle Status, and various diagnostic displays. These stored displays will then be used upon line power restoration until updated ones are created. To indicate this type of failure, the control will flash the current Time Of Day Display to indicate that this display and the Volume Remaining Display may not be correct.

Control Operation During Regeneration

In regeneration the control will display what regeneration step number the valve is advancing to, or has reached, and the time remaining in that step. Once all regeneration cycle steps have been completed the valve will return to service and resume normal operation.

1. First the Regeneration Arrow turns on. Then the display below is viewed to indicate that the valve is advancing to the first regeneration cycle step.

For Example:
(Valve is advancing to Regeneration Step #1)
(#1 flashing)

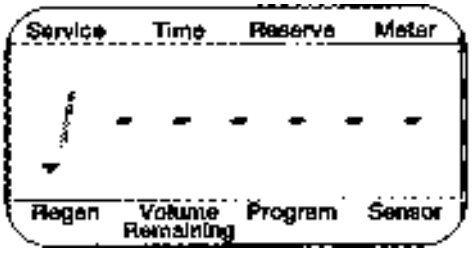

2. When the first cycle step is reached, the display becomes as shown below.

For Example:
(Regeneration Step #1 has been reached)
(10.0 minutes remain in Step #1)

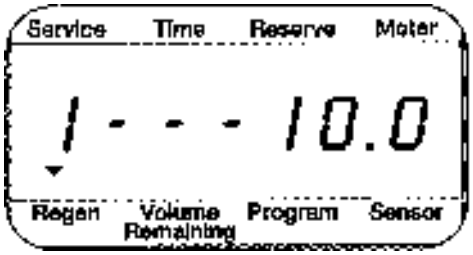

3. Pushing the Extra Cycle Button during a regeneration cycle will immediately advance the valve to the next cycle step position and resume normal step timing.
4. Pushing the Up or Down Set Button during a regeneration cycle will adjust the time remaining in a regeneration cycle step. Actual Regeneration Cycle Step programming will not be changed.

Printed in U.S.A.

Control Operation (Cont'd.)

Control Operation During Programming

The control will only enter the Program Mode with the valve in Service and operating on line power. While in the Program Mode the control will continue to operate normally monitoring water usage and keeping all displays up to date. Control programming is stored in memory permanently with or without line or battery backup power.

Lockout Input Operation

The Lockout Arrow will turn on whenever a Lockout Signal is being received by the control. Any requests for regeneration will be delayed until this signal is removed. Regeneration will then proceed normally.

Keypad Operation

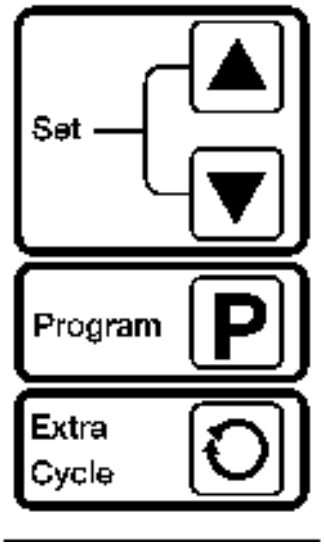

Up Set Button
This button is used to set the current time of day, adjust time remaining in a regeneration cycle step, and in valve programming. The Up Arrow Button will increment a display setting.

Down Set Button
This button is used to set the current time of day, adjust time remaining in a regeneration cycle step, and in valve programming. The Down Arrow Button will decrement a display setting.

Program Button
This button is used by the installer to program those settings indicated on the front panel by the display.

Extra Cycle Button
Pushing this button will initiate a regeneration cycle independently of actual valve conditions.

1. With **Immediate Regeneration Valves** this extra regeneration would occur immediately.
2. With **Delayed Regeneration Valves** this extra regeneration would occur at the set Regeneration Time. A regeneration cycle can be forced to occur immediately by pushing and holding this button for 5 seconds.

Printed in U.S.A.

MODEL 6600 Downflow

Water Conditioner Flow Diagrams (Downflow Brining)

Using Black Cycle Cam (Part No. 17438)

Service Position

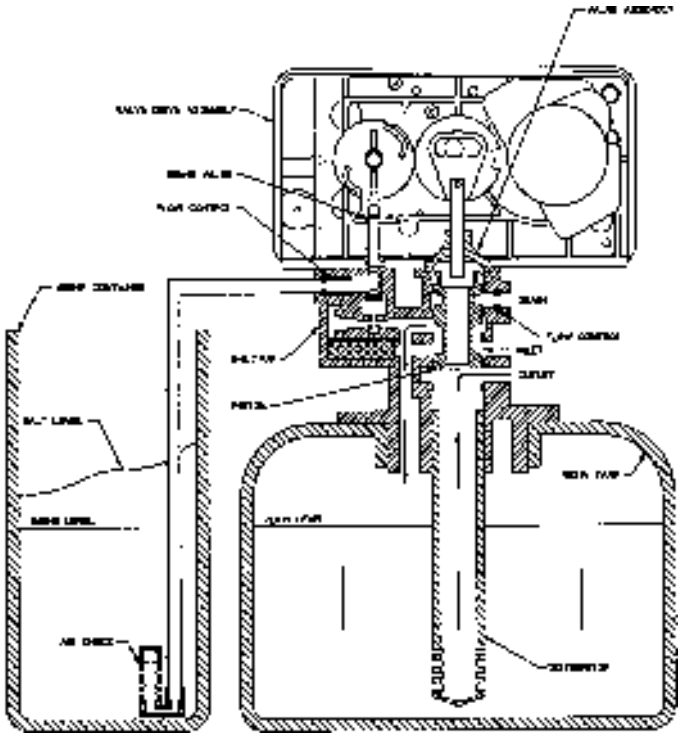

Backwash Position

(Regeneration Cycle Step #1)

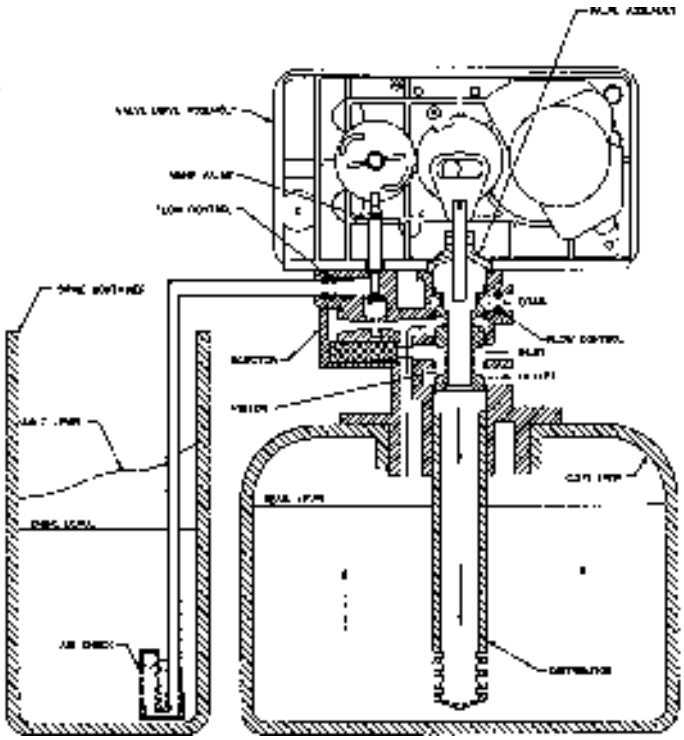

Printed in U.S.A.

MODEL 6600 Downflow

Water Conditioner Flow Diagrams (Downflow Brining)

Using Black Cycle Cam (Part No. 17438) (Cont'd.)

Brine/Slow Rinse Position
(Regeneration Cycle Step #2)

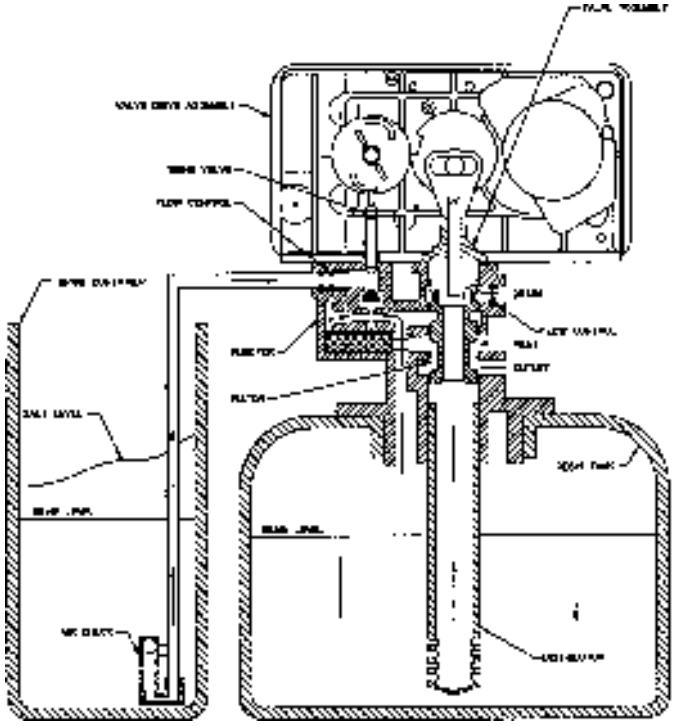

Rapid Rinse Position
(Regeneration Cycle Step #3)

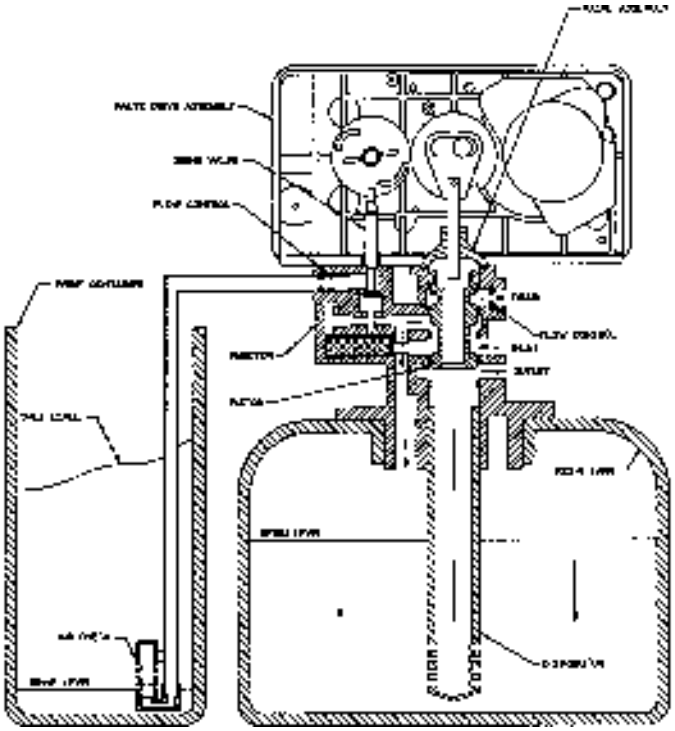

Printed in U.S.A.

MODEL 6600 Downflow

Water Conditioner Flow Diagrams (Downflow Brining)

Using Black Cycle Cam (Part No. 17438) (Cont'd.)

Brine Tank
Fill Position
(Regeneration Cycle Step #4)

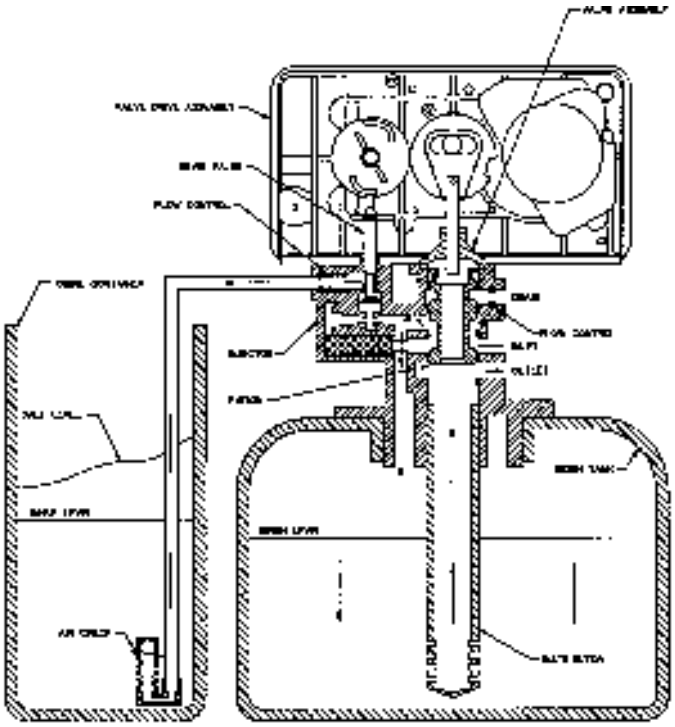

Service
Position

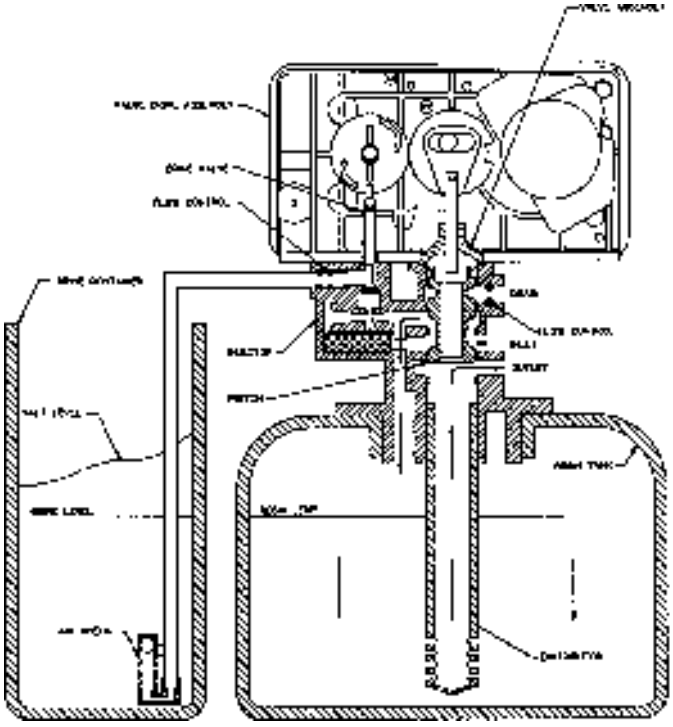

Printed in U.S.A.

Valve Wiring Diagram

Standard 6600 Wiring

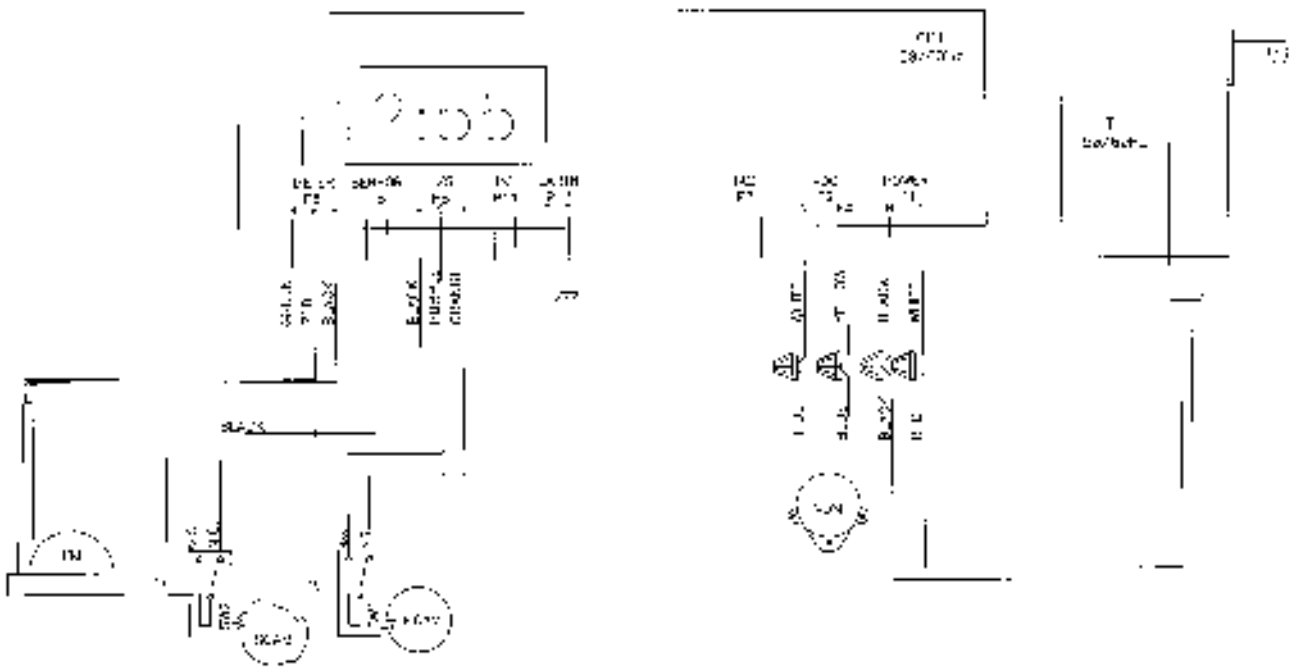

CD – 6600/6700 CONTROL BOARD
VDM – VALVE DRIVE MOTOR
EM – ELECTRONIC FLOW METER (OPTIONAL)
T – 24V WALL TRANSFORMER

SW – HOMING SWITCH
SW2 – STEP SWITCH
HCAM – HOMING CAM
SCAM – STEP CAM

Printed in U.S.A.

MODEL 6600 Downflow

Valve Powerhead

(See Opposite Page For Parts List)

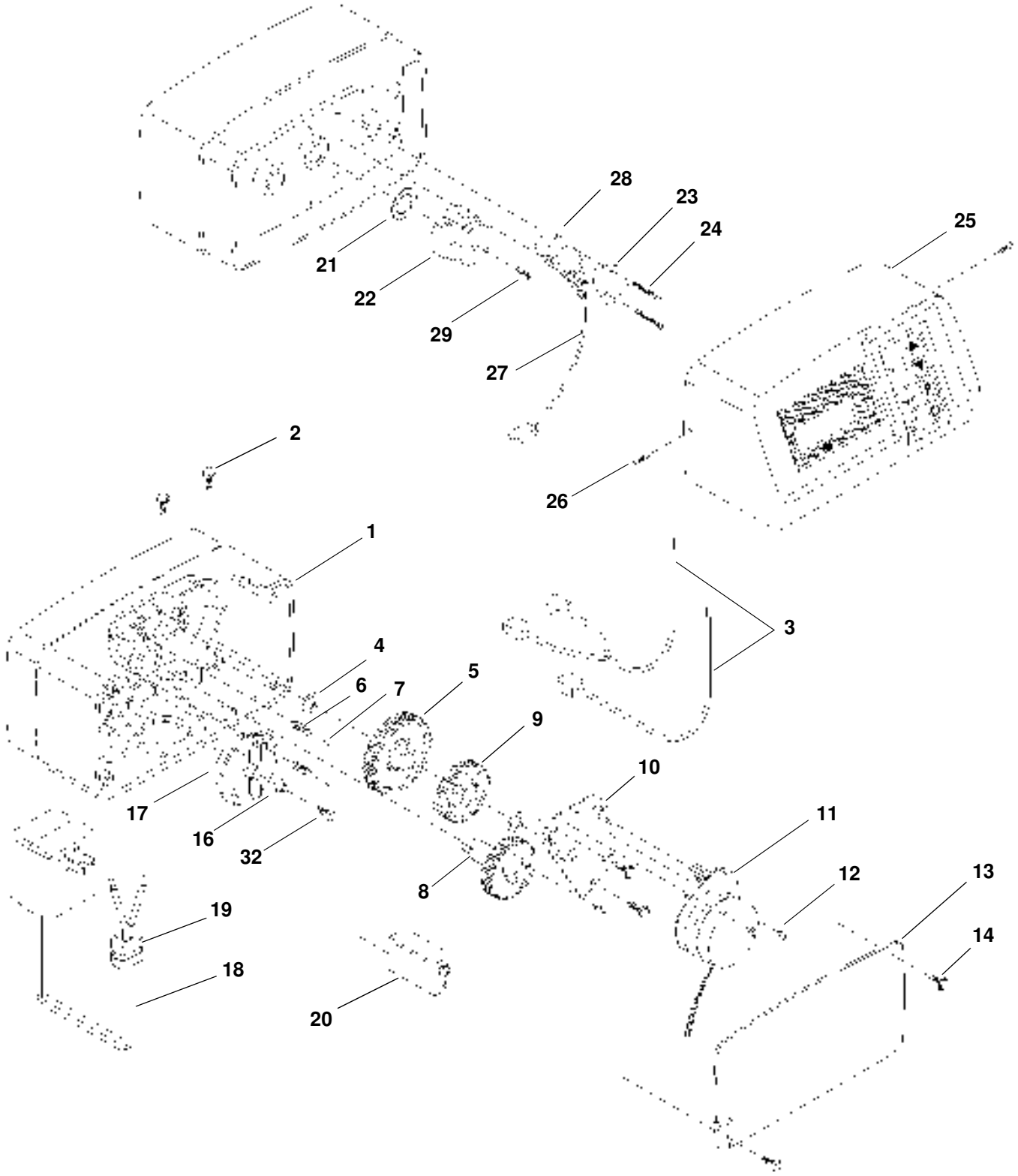

Printed in U.S.A.

MODEL 6600 Downflow

Valve Powerhead

Parts List

Item No.	Quantity	Part No.	Description
1	1	26001-02	Drive Housing, Black
2	2	12473	Screw, Drive Mount
3	1	19118	Wire Harness, Power
4	1	13299	Spring Washer
5	1	13017	Idler Gear
6	2	19080	Spring, Detent
7	2	13300	Ball, Detent
8	1	25005	Main Drive Gear & Shaft (Downflow Brining - Black)
9	1	23045	Drive Gear
10	1	13175	Motor Mounting Plate
11	1	16944	Drive Motor 2RPM 24V 50/60Hz
12	3	11384	Screw, Motor
13	1	13229	Back Plate
14	4	13296	Screw, Component
16	1	12037	Washer
17	1	18722	Cam, Brine Valve B/W 1st.
18	1	19674	Transformer, 24V 9.6VA (U.S. 120V)
	1	25651	Transformer, 24V 9.6VA (European 230V)
19	1	13547	Strain Relief
20	1		9V Alkaline Battery (Not Included)
21	1	19079	Washer, Friction
22	1	17438	Cycle Cam (Downflow Brining - Black) B/W 1st.
23	1	10302	Insulator
24	2	17876	Screw, Microswitch
25	1	60751-xx	Front Panel Assembly (Specify Color/Voltage)
26	2	13898	Screw, Front Panel
27	1	19119-01	Wire Harness, Home & Step Switch
28	2	10218	Microswitch
29	1	15151	Screw, Cycle Cam
30	4	12681	Wire Nut, Beige (Not Shown)
31	1	19602	Insulator, Circuit Board (Not Shown)
32	1	40214	Screw

Printed in U.S.A.

MODEL 6600 Downflow

Control Valve Assembly - Downflow Brining

(See Opposite Page For Parts List)

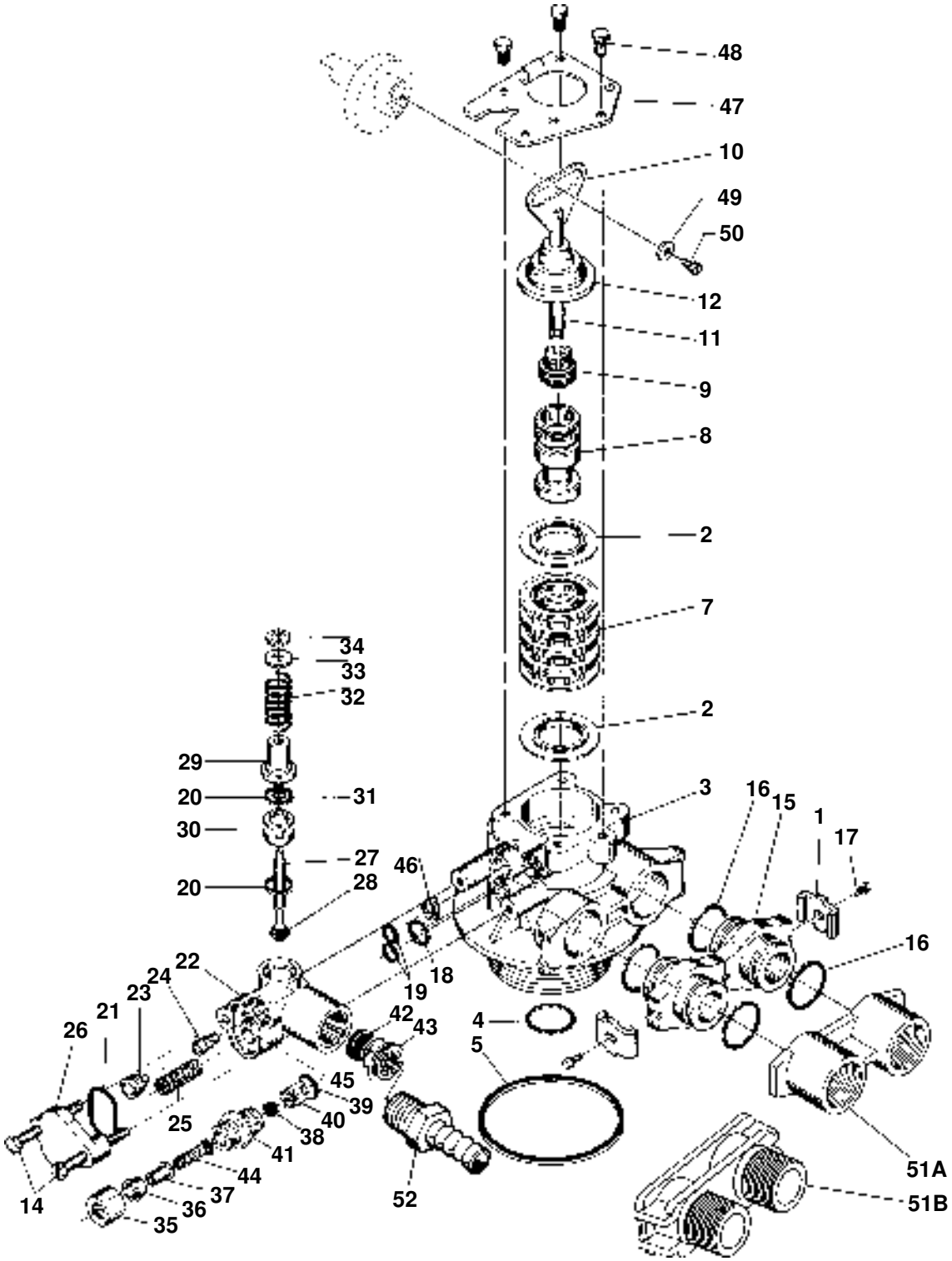

Printed in U.S.A.

MODEL 6600 Downflow

Control Valve Assembly - Downflow Brining

Parts List

Item No.	Quantity	Part No.	Description
*1	2	13255	Adapter Clip
2	5	13242	Seal
3	1	14449	Valve Body Assembly - 1″ Dist.
	1	14450	Valve Body Assembly - 13/16″ Dist.
4	1	13304	O-Ring - Distributor Tube - 1″
	1	10244	O-Ring - Distributor Tube - 13/16″
5	1	12281	O-Ring - Top of Tank
7	4	14241	Spacer
8	1	17218	Piston (Used with Black Cycle Cam)
9	2	14309	Piston Rod Retainer
	2	16590	Piston Rod Retainer, HW (Hot Water)
10	1	13001-04	Piston Rod Assembly
11	1	14919	Piston Rod
12	1	13446-40	End Plug Assembly - Green
14	2	13315	Screw - Injector Mounting
*15	2	19228	Adapter Coupling
*16	4	13305	O-Ring - Adapter Coupling
*17	2	13314	Screw - Adapter Coupling
18	1	12638	O-Ring - Drain
19	2	13301	O-Ring - Injector
20	2	13302	O-Ring - Brine Spacer
21	1	13303	O-Ring - Injector Cover
22	1	13163	Injector Body
23	1	10913	Injector Nozzle - Specify Size
24	1	10914	Injector Throat - Specify Size
25	1	10227	Injector Screen
26	1	13166	Injector Cover
27	1	13172	Brine Valve Stem
28	1	12626	Brine Valve Seat
29	1	13165	Brine Valve Cap
30	1	13167	Brine Valve Spacer
31	1	12550	Quad Ring
32	1	11973	Spring - Brine Valve
33	1	16098	Washer - Brine Valve
34	1	11981-01	Retaining Ring
35	1	10329	B.L.F.C. Fitting Nut 3/8″
36	1	10330	B.L.F.C. Ferrule 3/8″
37	1	10332	B.L.F.C. Tube Insert 3/8″
38	1		B.L.F.C. Button - Specify Size
39	1	12977	O-Ring - B.L.F.C.
40	1	13245	B.L.F.C. Button Retainer
41	1	13244	B.L.F.C. Fitting
42	1		D.L.F.C. Button - Specify Size
43	1	13173	D.L.F.C. Button Retainer
44	1	12767	Screen - Brine Line
45	1	15348	O-Ring - D.L.F.C.
46	1	13497	Air Disperser
47	1	13546	End Plug Retainer
48	3	12112	Screw
49	1	13363	Washer
50	1	13296	Screw
51A	1	13398	Yoke, Brass, 1″ NPT
	1	13708	Yoke, Brass, 3/4″ NPT
51B	1	18706	Yoke, Plastic, 1″ NPT
	1	13706-02	Yoke, Plastic, 3/4″ NPT
52	1	13308	Drain Hose Barb

* Not used with meter controls.

Printed in U.S.A.

MODEL 6600 Downflow

Meter Assembly

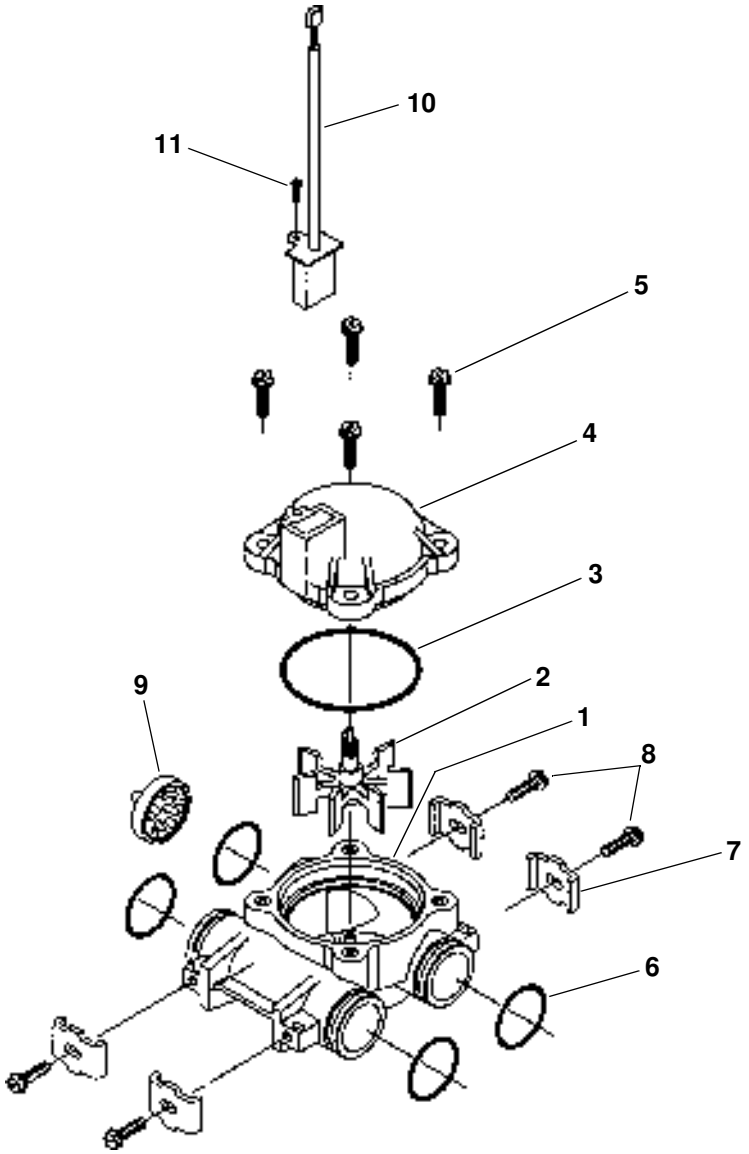

Item No.	Quantity	Part No.	Description
1	1	13821	Meter Body
2	1	13509	Impeller
3	1	13847	O-Ring, -137
4	1	14716	Meter Cap Assembly, Electronic
5	4	12473	Screw, Hex Washer, 10-24 x 5/8
6	4	13305	O-Ring, -119
7	4	13255	Clip, Mounting
8	4	13314	Screw, Hex Washer Head, 8-18 x 5/8
9	1	14613	Flow Straightener
10	1	19121-01	Harness Assembly, Flow Meter
11	1	17798	Screw

Printed in U.S.A.

MODEL 6600 Downflow

By-Pass Valve Assembly, Brass

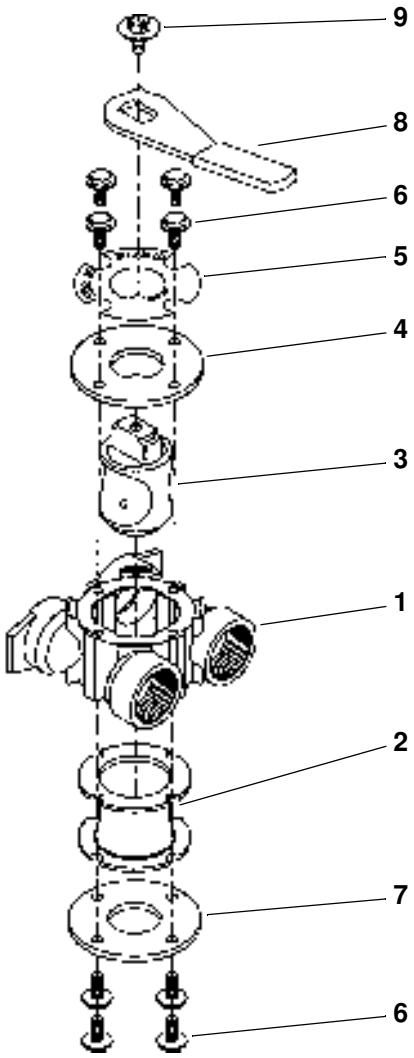

Item No.	Quantity	Part No.	Description
1	1	17290	By-Pass Valve Body, 3/4″
	1	17290NP	By-Pass Valve Body, 3/4″ Nickel Plate
	1	13399	By-Pass Valve Body, 1″
	1	13399NP	By-Pass Valve Body, 1″, Nickel Plate
2	1	11726	Seal, By-Pass
3	1	11972	Plug, By-Pass
4	1	11978	Side Cover
5	1	13604-01	Label
6	8	15727	Screw
7	1	11986	Side Cover
8	1	11979	Lever, By-Pass
9	1	11989	Screw, Hex Head, 1/4-14

Printed in U.S.A.

MODEL 6600 Downflow

By-Pass Valve Assembly, Plastic

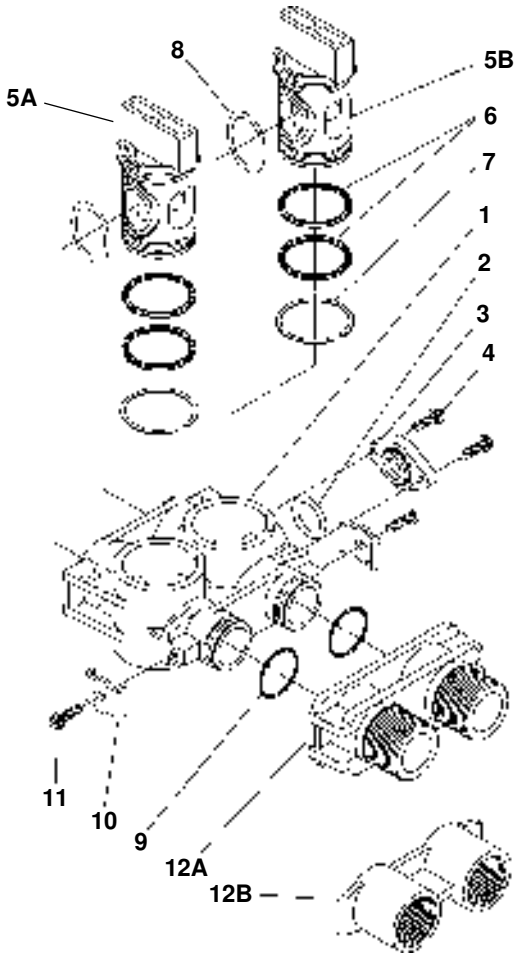

Item No.	Quantity	Part No.	Description
1	1	19723	By-Pass Valve Body, Plastic
2	1	11183	O-Ring, -015
3	1	19724	Cap, By-Pass
4	2	17512	Screw, Hex Washer Head, #6-24 x 3
5A	1	17820	Plug, By-Pass, Inlet
5B	1	17820-01	Plug, By-Pass, Outlet (White)
6	4	18661	O-Ring, -218
7	2	18662	Retaining Ring
8	2	18660	O-Ring
9	2	13305	O-Ring, -119
10	2	13255	Clip, Mounting
11	2	13314	Screw, Hex Washer Head, 8-18 x 5/8
12A	1	18706	Yoke, Plastic, 1" NPT
	1	18706-02	Yoke, Plastic, 3/4" NPT
12B	1	13708	Yoke, Brass, 3/4" NPT
	1	13708NP	Yoke, 3/4" NPT Nickel Plated
	1	13398	Yoke, Brass, 1" NPT
	1	13398NP	Yoke, 1" NPT Nickel Plated

Printed in U.S.A.

MODEL 6600 Downflow

2300 Safety Brine Valve

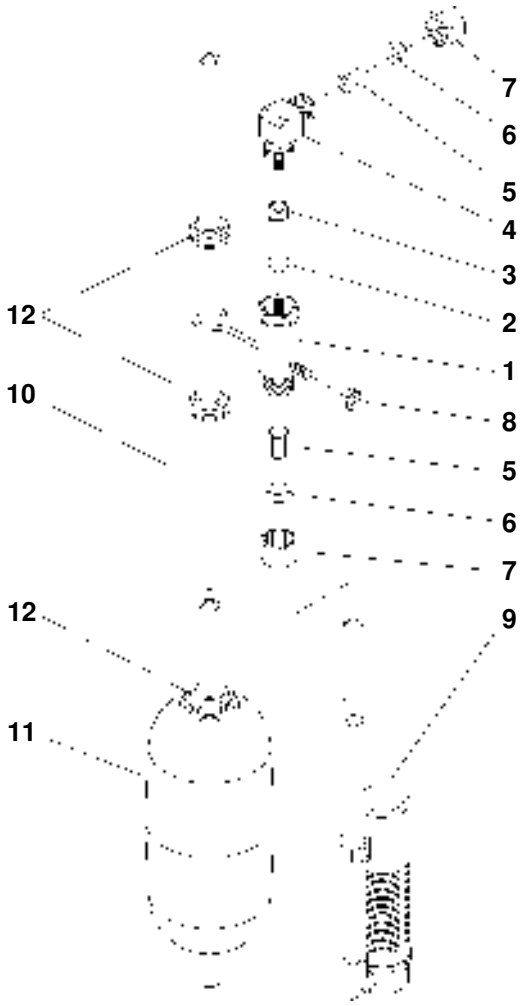

Item No.	Quantity	Part No.	Description
1	1	60027-00	2300 Safety Brine Valve Body
2	1	10138	Ball, 3/8″
3	1	11566	Bull Stop
4	1	10328	Elbow, 1/4 x 1/4 T
5	2	10332	Insert, 3/8
6	2	10330	Sleeve, 3/8
7	2	10329	Tube Nut, 3/8
8	1	10186	Nut, Hex, 10-32, Nylon
9	1	60002	#500 Air Check
10	1	10149	Float Rod, 30″
11	1	10700	Float Assembly, Blue/White
12	4	10150	Grommet

Printed in U.S.A.

MODEL 6600 Downflow

2310 Safety Brine Valve

(See Opposite Page For Parts List)

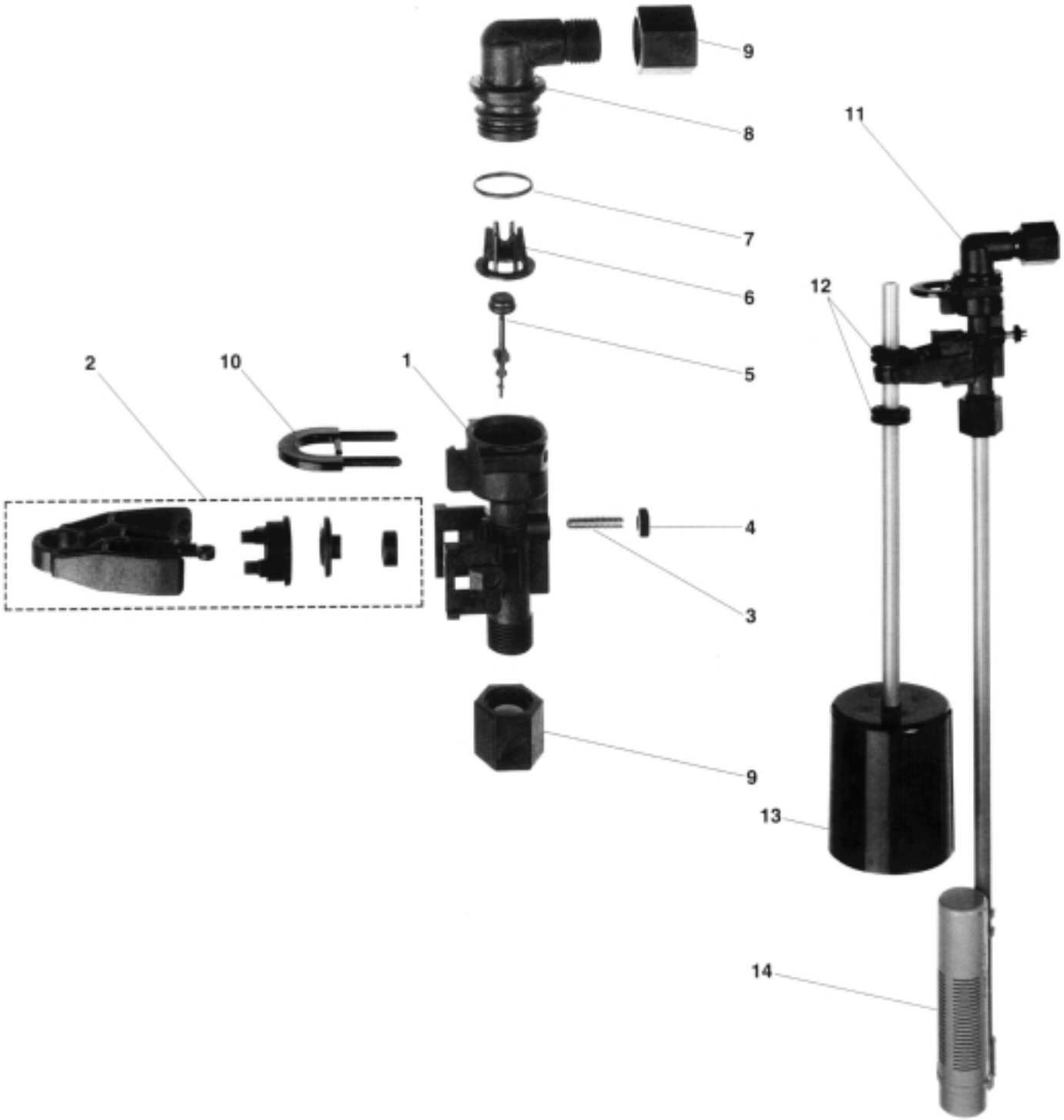

Printed in U.S.A.

MODEL 6600 Downflow

2310 Safety Brine Valve

Parts List

Item No.	Quantity	Part No.	Description
1	1	19645	Safety Brine Valve Body
2	1	19803	Safety Brine Valve Arm Assembly
3	1	19804	Stud, 10-24
4	1	19805	Nut, 10-24
5	1	19652-01	Poppet & Seal
6	1	19649	Flow Dispenser
7	1	11183	O-Ring, -017
8	1	19647	Elbow, Safety Brine Valve
9	2	19625	Nut Assembly, 3/8
10	1	18312	Retaining Clip
11	1	60014	Safety Brine Valve, 2310 (includes items 1-10)
12	2	10150	Grommet (included with item 13)
13	1	60068	Float Assembly, 2310
14	1	60002	500 Air Check Assembly

Printed in U.S.A.

A. TO REPLACE TIME BRINE VALVE, INJECTORS, AND SCREEN

1. Turn off water supply to conditioner:
   a. If the conditioner installation has a “three valve” by-pass system, first open the valve in the by-pass line, then close the valves at the conditioner inlet and outlet.
   b. If the conditioner has an integral by-pass valve, put it in the by-pass position.
   c. If there is only a shut-off valve near the conditioner inlet, close it.
2. Relieve water pressure in the conditioner by stepping the control into the backwash position momentarily. Return the control to the service position.
3. Unplug electrical cord from outlet.
4. Disconnect brine tube and drain line connections at the injector body.
5. Remove the two injector body mounting screws. The injector and brine module can now be removed from the control valve. Remove and discard brine body O-rings.

6A. To replace brine valve.

1. Pull brine valve from injector body, also remove and discard O-ring at bottom of brine valve hole.
2. Apply silicone lubricant to new O-ring and reinstall at bottom of brine valve hole.
3. Apply silicone lubricant to O-ring on new valve assembly and press into brine valve hole, shoulder on bushing should be flush with injector body.

6B. To replace injectors and screen.

1. Remove injector cap and screen, discard O-ring. Unscrew injector nozzle and throat from injector body.
2. Screw in new injector throat and nozzle, be sure they are sealed tightly. Install a new screen.
3. Apply silicone lubricant to new O-ring and install around oval extension on injector cap.

7. Apply silicone lubricant to three new O-rings and install over three bosses on injector body.
8. Insert screws with washers thru injector cap and injector. Place this assembly thru hole in timer housing and into mating holes in the valve body. Tighten screws.
9. Reconnect brine tube and drain line.
10. Return by-pass or inlet valving to normal service position. Water pressure should now be applied to the conditioner, and any by-pass line shut off.
11. Check for leaks at all seal areas. Check drain seal with the control in the backwash position.
12. Plug electrical cord into outlet.
13. Set time of day and cycle the control valve manually to assure proper function. Make sure control valve is returned to the service position.
14. Make sure there is enough salt in the brine tank.
15. Start regeneration cycle manually if water is hard.

B. TO REPLACE TIMER

1. Follow Steps A.1 through A.3.
2. Remove the control valve back cover. Remove the control valve front cover. Disconnect the meter dome signal wire from the front cover and feed it back through the control.
3. Remove screw and washer at drive yoke. Remove timer mounting screws. The entire timer assembly will now lift off easily.
4. Put new timer on top of valve. Be sure drive pin on main gear engages slot in drive yoke.
5. Replace timer mounting screws. Replace screw and washer at drive yoke. Replace meter signal wire.
6. Return by-pass or inlet valving to normal service position. Water pressure should now be applied to the conditioner, and any by-pass line shut off.
7. Replace the control valve back cover.
8. Follow Steps A.12 through A.15.

C. TO REPLACE PISTON ASSEMBLY

1. Follow Steps A.1 through A.3.
2. Remove the control valve back cover. Remove the control valve front cover. Disconnect the meter dome signal wire from the front cover and feed it back through the control.
3. Remove screw and washer at drive yoke. Remove timer mounting screws. The entire timer assembly will now lift off easily. Remove end plug retainer plate.
4. Pull upward on end of piston yoke until assembly is out of valve.
5. Inspect the inside of the valve to make sure that all spacers and seals are in place, and that there is no foreign matter that would interfere with the valve operation.

Printed in U.S.A.

6. Take new piston assembly as furnished and push piston into valve by means of the end plug. Twist yoke carefully in a clockwise direction to properly align it with drive gear. Replace end plug retainer plate.
7. Place timer on top of valve. Be sure drive pin on main gear engages slot in drive yoke.
8. Replace timer mounting screws. Replace screw and washer at drive yoke.
9. Return by-pass or inlet to normal service position. Water pressure should now be applied to the conditioner, and any by-pass line shut off.
10. Replace the control valve back cover.
11. Follow Steps A.12 through A.15.

D. TO REPLACE SEALS AND SPACERS

1. Follow Steps A.1 through A.3.
2. Remove the control valve back cover. Remove the control valve front cover. Disconnect the meter dome signal wire from the front cover and feed it back through the control.
3. Remove screw and washer at drive yoke. Remove timer mounting screws. The entire timer assembly will now lift off easily. Remove end plug retainer plate.
4. Pull upward on end of piston rod yoke until assembly is out of valve. Remove and replace seals and spacers.
5. Take piston assembly and push piston into valve by means of the end plug. Twist yoke carefully in a clockwise direction to properly align it with drive gear. Replace end plug retainer plate.
6. Place timer on top of valve. Be sure drive pin on main gear engages slot in drive yoke.
7. Replace timer mounting screws. Replace screw and washer at drive yoke.
8. Return by-pass or inlet valving to normal service position. Water pressure should now be applied to the conditioner, and any by-pass line shut off.
9. Replace the control valve back cover.
10. Follow Steps A.12 through A.15.

E. TO REPLACE METER

1. Follow Steps A.1 through A.3.
2. Remove screw holding signal wire from meter dome.
3. Remove two screws and clips at by-pass valve or yoke. Pull resin tank away from plumbing connections.
4. Remove two screws and clips at control valve. Pull meter module out of control valve.
5. Apply silicone lubricant to four new O-rings and assemble to four ports on new meter module.
6. Assemble meter to control valve. Note, meter portion of module must be assembled at valve outlet.
7. Attach two clips and screws at control valve. Be sure clip legs are firmly engaged with lugs.
8. Push resin tank back to the plumbing connections and engage meter ports with by-pass valve or yoke.
9. Attach two clips and screws at by-pass valve or yoke. Be sure clip legs are firmly engaged with lugs.
10. Return by-pass or inlet valving to normal service position. Water pressure should now be applied to the conditioner, and any by-pass line shut off.
11. Check for leaks at all seal areas.
12. Connect meter dome signal wire.
13. Follow Steps A.12 through A.15.

F. TO REPLACE METER COVER AND/OR IMPELLER

1. Follow Steps A.1 through A.3.
2. Remove screw holding signal wire from meter dome.
3. Remove four screws on cover.
4. Lift cover off of meter module, discard O-ring.
5. Remove and inspect impeller for gear or spindle damage, replace if necessary.
6. Apply silicone lubricant to new O-ring and assemble to the smallest diameter on meter cover.
7. Assemble cover to meter module. Be sure impeller spindle enters freely into cover. Press firmly on cover and rotate if necessary to assist in assembly.
8. Replace four screws and tighten.
9. Return by-pass or inlet valving to normal service position. Water pressure should now be applied to the conditioners, and any by-pass shut off.
10. Check for leaks at all seal areas.
11. Connect meter dome signal wire.
12. Follow Steps A.12 through A.15.

Printed in U.S.A.

PROBLEM	CAUSE	CORRECTION
1. Softener fails to regenerate.	A. Electrical service to unit has been interrupted.	A. Assure permanent electrical service (check fuse, plug, pull chain or switch).
	B. Timer is not operating properly.	B. Replace timer.
	C. Defective valve drive motor.	C. Replace drive motor.
	D. Timer programming bad (improper programming).	D. Check programming and reset as needed.
2. Softener delivers hard water.	A. By-pass valve is open.	A. Close by-pass valve.
	B. No salt in brine tank.	B. Add salt to brine tank and maintain salt level above water level.
	C. Injectors or screen plugged.	C. Replace injectors and screen.
	D. Insufficient water flowing into brine tank.	D. Check brine tank fill time and clean brine line flow if plugged.
	E. Hot water tank hardness.	E. Repeated flushings of the hot water tank is required.
	F. Leak at distributor tube.	F. Make sure distributor tube is not cracked. Check O-ring and tube pilot.
	G. Internal valve leak.	G. Replace seals and spacers and/or piston.
	H. Flow meter jammed.	H. Remove obstruction from flow meter.
	I. Flow meter cable disconnected or not plugged into meter cap.	I. Check meter cable connection to timer and meter cap.
	J. Improper programming.	J. Reprogram the control to the proper regeneration type, inlet water hardness, capacity or flow meter size.
3. Unit uses too much salt.	A. Improper salt setting.	A. Check salt usage and salt setting.
	B. Excessive water in brine tank.	B. See problem No. 7.
	C. Improper programming.	C. Check programming and reset as needed.
4. Loss of water pressure.	A. Iron buildup in line to water conditioner.	A. Clean line to water conditioner.
	B. Iron buildup in water conditioner.	B. Clean control and add resin cleaner to resin bed. Increase frequency of regeneration.
	C. Inlet of control plugged due to foreign material broken loose from pipes by recent work done on plumbing system.	C. Remove piston and clean control.
5. Loss of resin through drain line.	A. Air in water system.	A. Assure that well system has proper air eliminator control check for dry well condition.
	B. Drain line flow control is too large.	B. Ensure drain line flow control is sized correctly.

Printed in U.S.A.

PROBLEM	CAUSE	CORRECTION
6. Iron in conditioned water.	A. Fouled resin bed.	A. Check backwash, brine draw and brine tank fill. Increase frequency of regeneration. increase backwash time.
	B. Iron content exceeds recommended parameters.	B. Add Iron removal from filter or system.
7. Excessive water in brine tank.	A. Plugged drain line flow control.	A. Clean flow control.
	B. Brine valve failure.	B. Replace brine valve.
	C. Improper programming.	C. Check programming and reset as needed.
8. Salt water in service line.	A. Plugged injector system.	A. Clean injector and replace screen.
	B. Timer not operating properly.	B. Replace timer.
	C. Foreign material in brine valve.	C. Clean or replace brine valve.
	D. Foreign material in brine line flow control.	D. Clean brine line flow control.
	E. Low water pressure.	E. Raise water pressure.
	F. Improper programming.	F. Check programming and reset as needed.
9. Softener fails to draw brine.	A. Drain line flow control is plugged.	A. Clean drain line flow control.
	B. Injector is plugged.	B. Clean or replace injectors.
	C. Injector screen plugged.	C. Replace screen.
	D. Line pressure is too Low.	D. Increase line pressure, (line pressure must be at least 20 PSI at all times.)
	E. Internal control leak.	E. Change seals and spacers and/or piston assembly.
	F. Improper programming.	F. Check programming and reset as needed.
	G. Timer not operating properly.	G. Replace timer.
10. Control cycles continuously.	A. Timer not operating properly.	A. Replace timer.
	B. Faulty microswitches and or harness.	B. Replace faulty microswitch or harness.
	C. Faulty cycle cam operation.	C. Replace cycle cam or reinstall.
11. Drain flows continuously.	A. Foreign material in control.	A. Remove piston assembly and inspect bore, remove foreign material & check control in various regeneration positions.
	B. Internal control leak.	B. Replace seals and/or piston assembly.
	C. Control valve jammed in brine or backwash position.	C. Replace piston and seals and spacers.
	D. Timer motor stopped or jammed.	D. Replace Timer motor and check all gears for missing teeth.
	E. Timer not operating properly.	E. Replace timer.

Printed in U.S.A.

60022-12 . . . . BLFC .125 GPM
60022-25 . . . . BLFC .25 GPM
60022-50 . . . . BLFC .50 GPM
60022-100 . . . BLFC 1.0 GPM
For Illustration, See Page 16

1. . . . . 17307 . . . . . Flow Washer .125 GPM
12094 . . . . . Flow Washer .25 GPM
12095 . . . . . Flow Washer .50 GPM
12097 . . . . . Flow Washer 1.0 GPM
1. . . . . 12977 . . . . . O-Ring, - 015
1. . . . . 13244 . . . . . Adapter, BLFC
1. . . . . 13245 . . . . . Retainer, BLFC

60032 . . . . . Brine Valve
For Illustration, See Page 16

1. . . . . 11973 . . . . . Spring, Brine Valve
1. . . . . 11981-01 . . . . Retaining Ring
1. . . . . 12550 . . . . . Quad Ring, -009
1. . . . . 13165 . . . . . Cap, Brine Valve
1. . . . . 13167 . . . . . Spacer, Brine Valve
2. . . . . 13302 . . . . . O-Ring, -014
1. . . . . 16098 . . . . . Washer, Plain, Nylon
1. . . . . 13172 . . . . . Brine Valve Stem
1. . . . . 12626 . . . . . Seat, Brine Valve

60040 . . . . . By Pass, 3/4″, Brass
60040NP . . . . By Pass, 3/4″, Nickel
60041 . . . . . By Pass, 1″, Brass
60041NP . . . . By Pass, 1″, Nickel
For Illustration and Parts List,
See Page 19

60049 . . . . . Bypass, Plastic, 3/4″
For Illustration and Parts List,
See Page 20

60102-71. . . . . 6600 Piston Assembly - Downflow
For Illustration, See Page 16

1 . . . . . 14309 . . . . . Piston Rod Retainer
1 . . . . . 13001-04. . . . . Piston Rod Assembly
1 . . . . . 13446-40. . . . . End Plug Assy. - Green
1 . . . . . 17218 . . . . . Piston, Downflow Rapid Rinse

60125 . . . . . 6600 Seal and Spacer Kit
For Illustration and Parts List,
See Page 16 and Page 17

5 . . . . . 13242 . . . . . Seal
4 . . . . . 14241 . . . . . Spacer

60084 - . . . . . Specify Inj. Number, D.L.F.C.
Size, B.L.F.C. Size)
For illustration and Parts List
See Page 16 and Page 17

60086-50. . . . . 6600 Meter Assembly
For Illustration and Parts List,
See Page 18

60751-. . . . . 6600 Front Panel Assembly
For Illustration, See Page 15
-121 . . . . 24V 50/60 Hz, Black, 1 Relay

Printed in U.S.A.

MODEL 6600 Downflow

Notes: